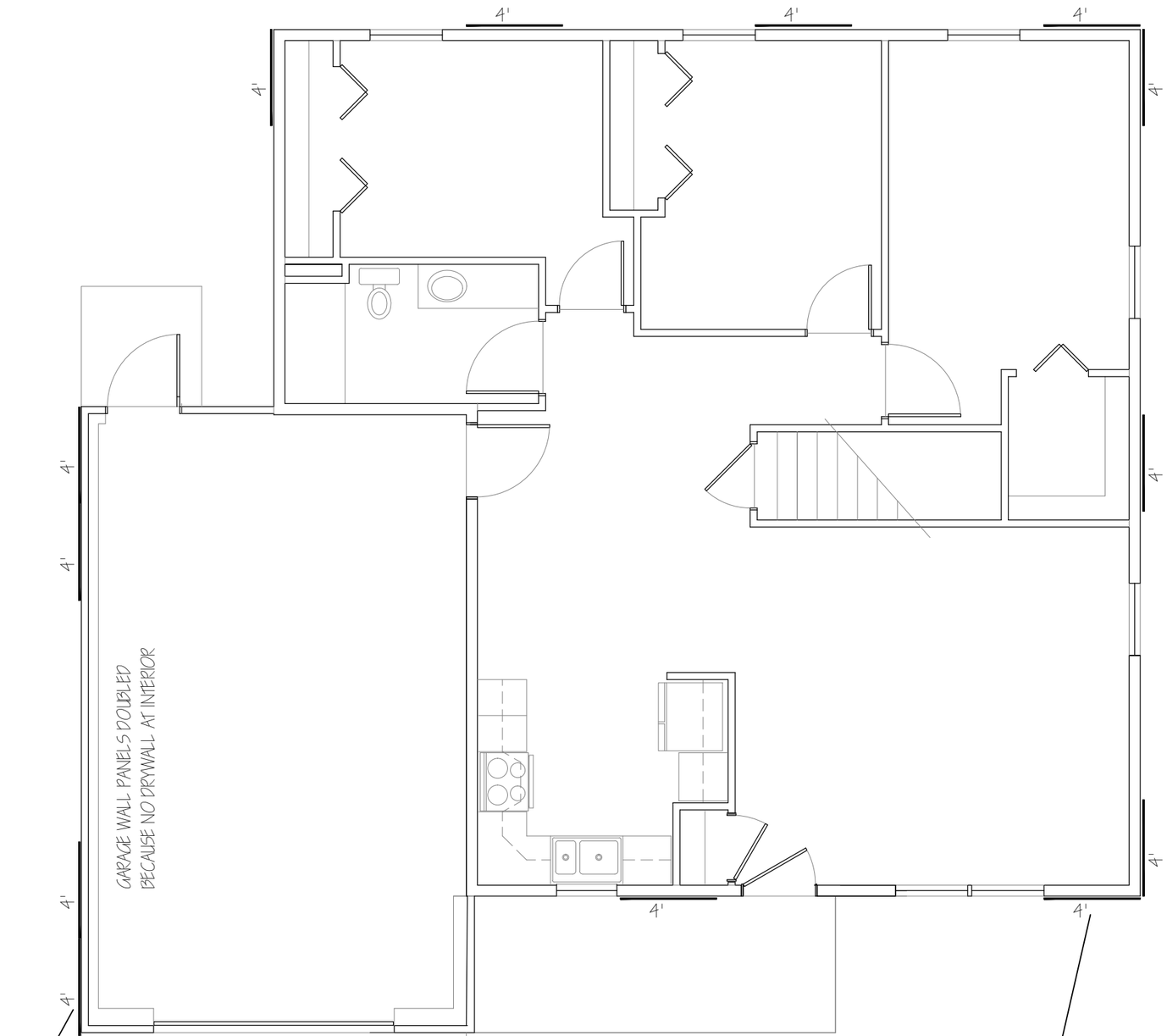

SEE PORTAL FRAME DETAILS AT RIGHT

CANTERBURY LATERAL BRACING

SCALE: 3/16" = 1'-0" 1,136 SQUARE FEET

BOLD LINES INDICATE THE LOCATION AND WIDTH OF BRACED WALL PANELS. PANELS TO BE 7/16" (MIN) STRUCTURAL WOOD. PANELS TO BEGIN AT BOTTOM WALL PLATE AND TERMINATE AT TOP OF DOUBLE WALL PLATE. JOINTS SHALL BE BACKED WITH 1-1/2" WOOD BLOCKING. ALL PANEL EDGES TO BE ATTACHED TO FRAMING OR BLOCKING WITH 8d NAILS AT 6" OC. ATTACH INTERIOR OF PANEL (FIELD) TO ALL FRAMING MEMBERS WITH 8d NAILS AT 12" OC.

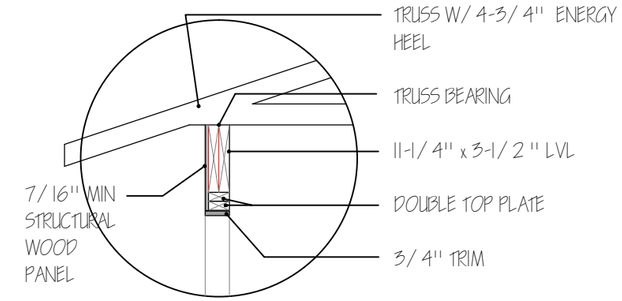

DETAIL - GARAGE DOOR HEADER

NO SCALE

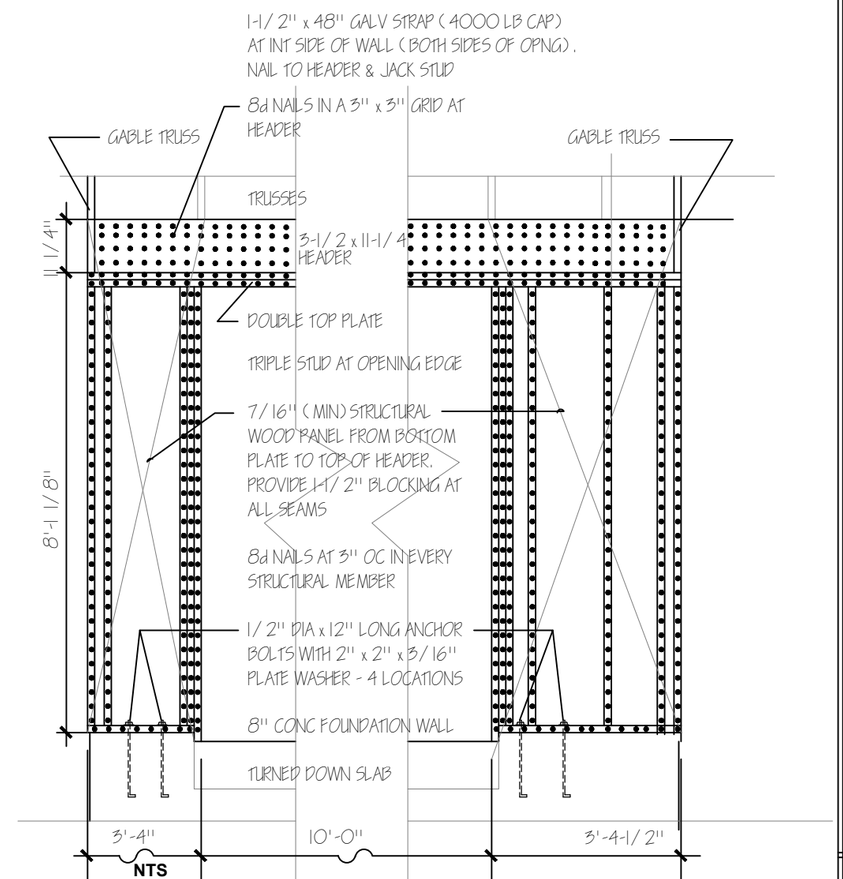

FASTEN 7/16" OSB SHEATHING TO ALL FRAMING MEMBERS W/ 8d COMMON NAILS AT 3" OC

DETAIL - PORTAL FRAME

3/8" = 1'-0"

REVISIONS

HABITAT FOR HUMANITY - WISCONSIN RIVER AREA

1211 Eighth Street, Baraboo, WI 53913 608-448-2888

CANTERBURY MODEL - LATERAL BRACING

Jan 4, 2022

LB-1

OF ONE